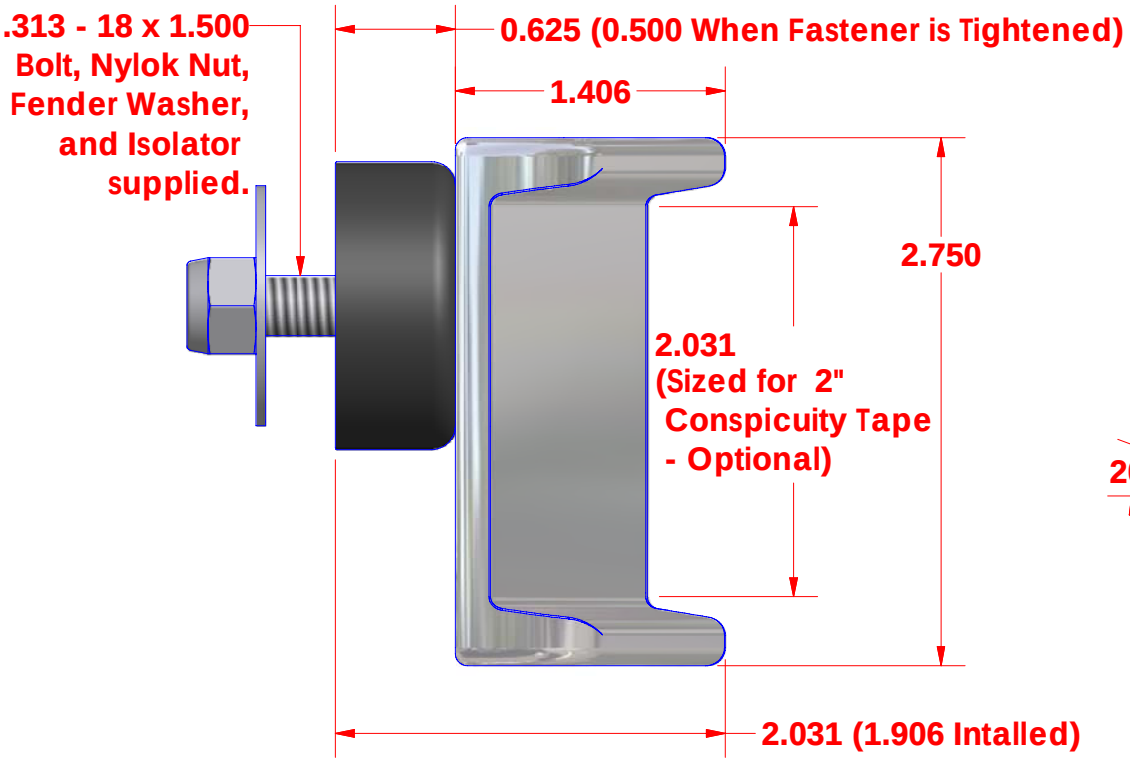

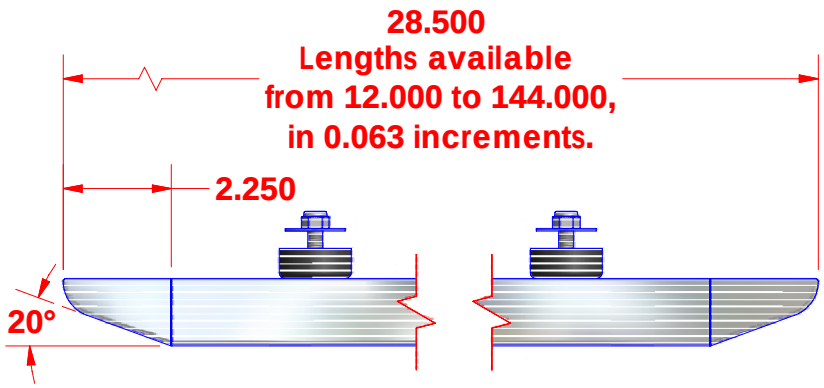

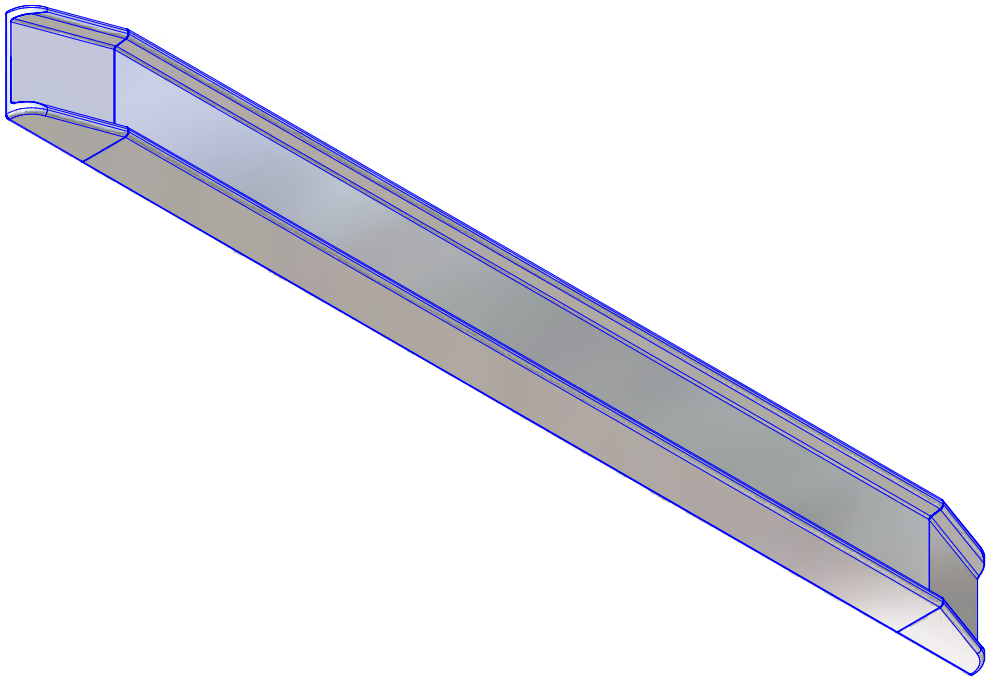

ENGINEER: SG	
CREATION DATE: 5/24/2006	
APPROVED BY: CH	
APPROVAL DATE: 5/24/2006	
SHEET SIZE: A	
REVISION: 1.0	
PART NUMBER: 70501	PART DESCRIPTION: Rub Rail, 24.0625 - 36", Assembly
FILE NAME: RubRail Assembly.idw	
MATERIAL:	

ON SCENE SOLUTIONS
P.O. BOX 270; WINDSOR, CO 80550; PH:(970)461-8731
www.onscenesolutions.com